INSTALLATION INSTRUCTION

SLIDING DOOR HARDWARE *HERRAJES PARA PUERTAS CORREDERAS*

Sliding door hardware
for routed wood doors
up to 176 lb (80 kg)*

Herrajes para puertas correderas
para puertas de madera fresadas
*hasta 176lb (80kg)**

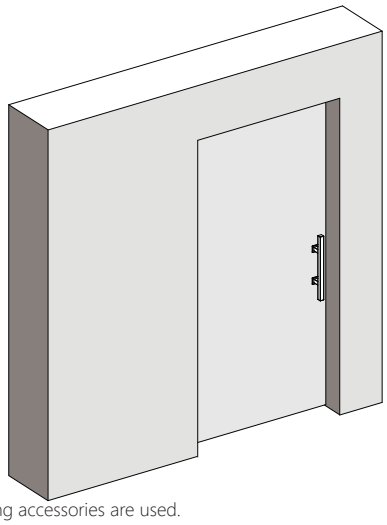

* The maximum door weight can be increased to 265 lb (120 kg) with upgraded wheels if no limiting accessories are used.
** El peso máximo de la puerta puede aumentarse a 265 lb (120 kg) con ruedas mejoradas si no se utilizan accesorios limitadores.*

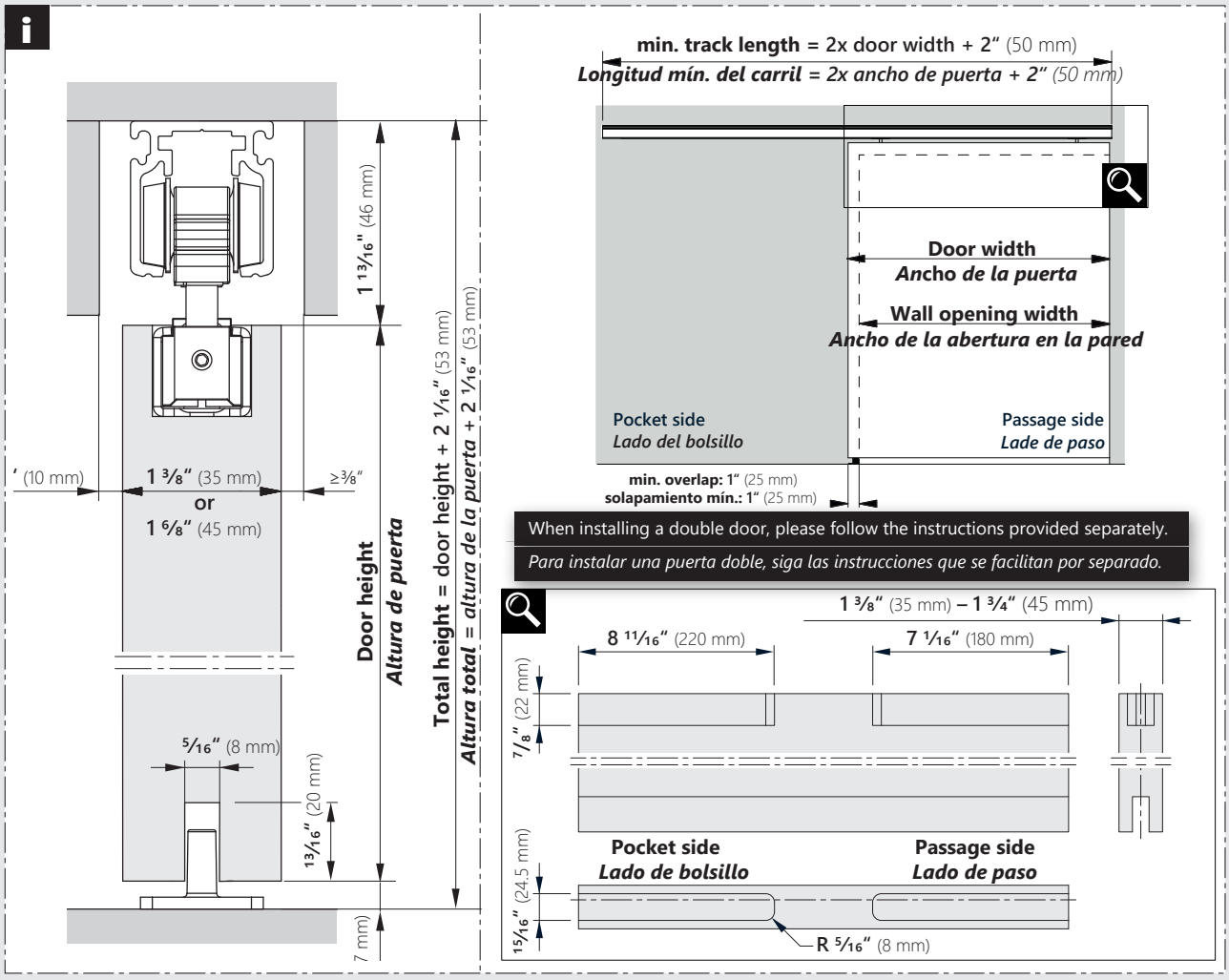

INSTALLATION INSTRUCTION

SLIDING DOOR HARDWARE *HERRAJES PARA PUERTAS CORREDERAS*

i Content **i Contenido**

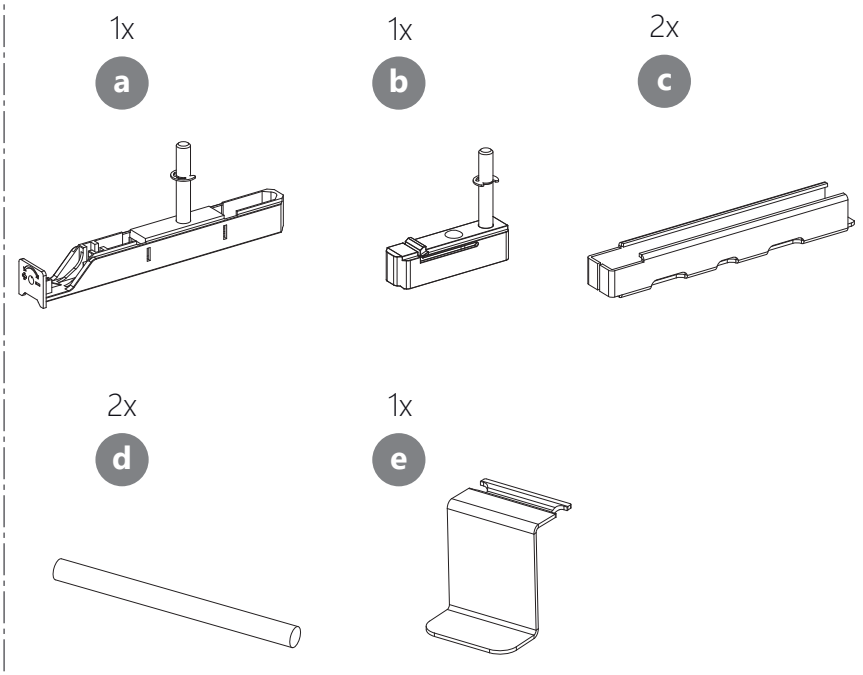

1

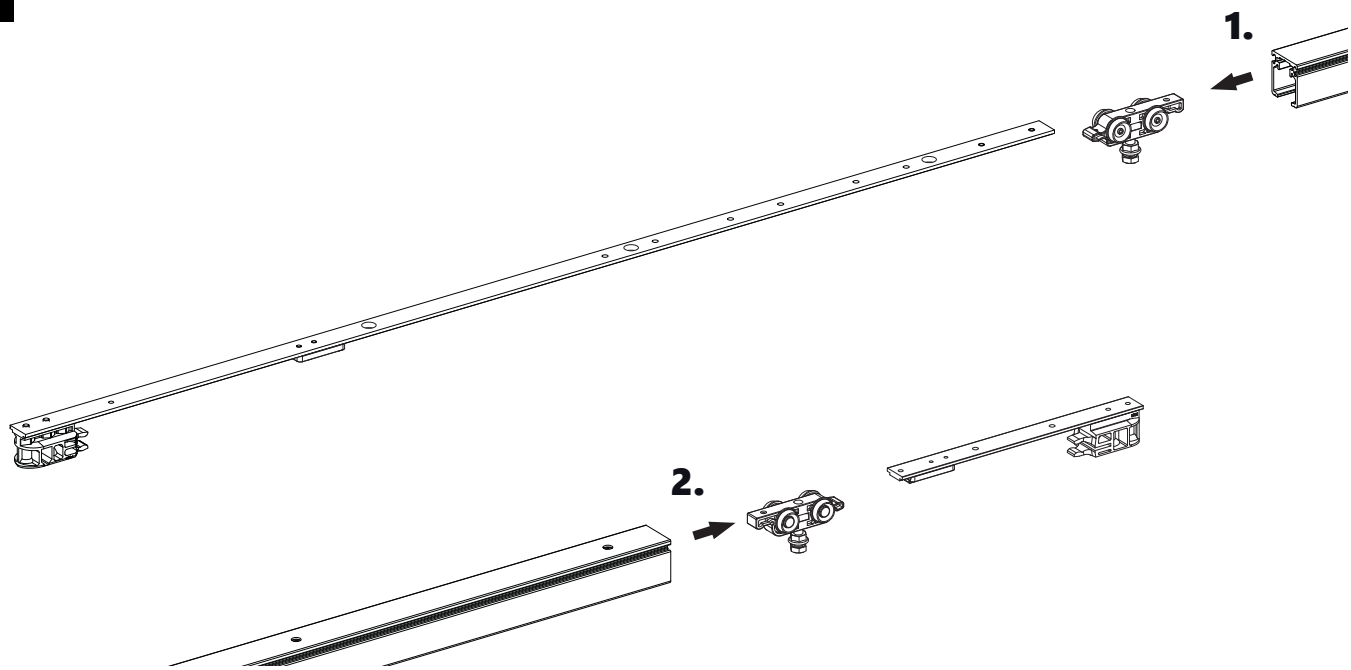

02/07/2024 - Details and specifications are subject to change without notice.
No responsibility will be accepted for any errors or omissions. Millimeters supersede inches.

INSTALLATION INSTRUCTION

SLIDING DOOR HARDWARE *HERRAJES PARA PUERTAS CORREDERAS*

2 Version 1

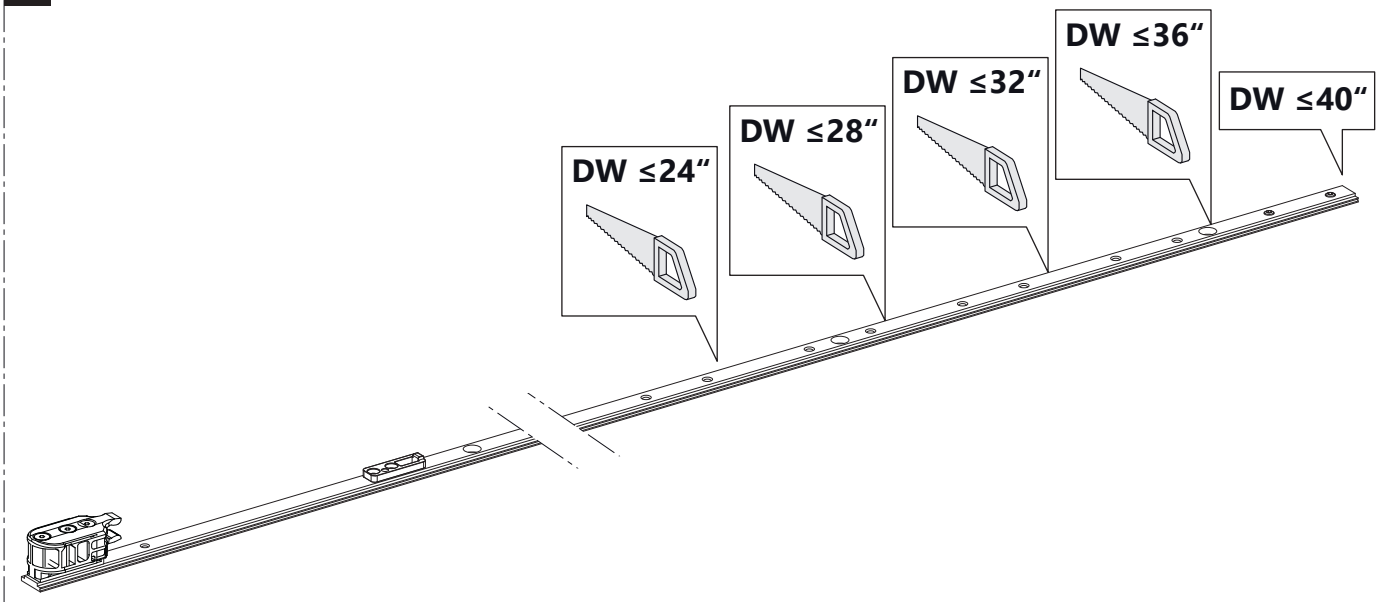

Version 2

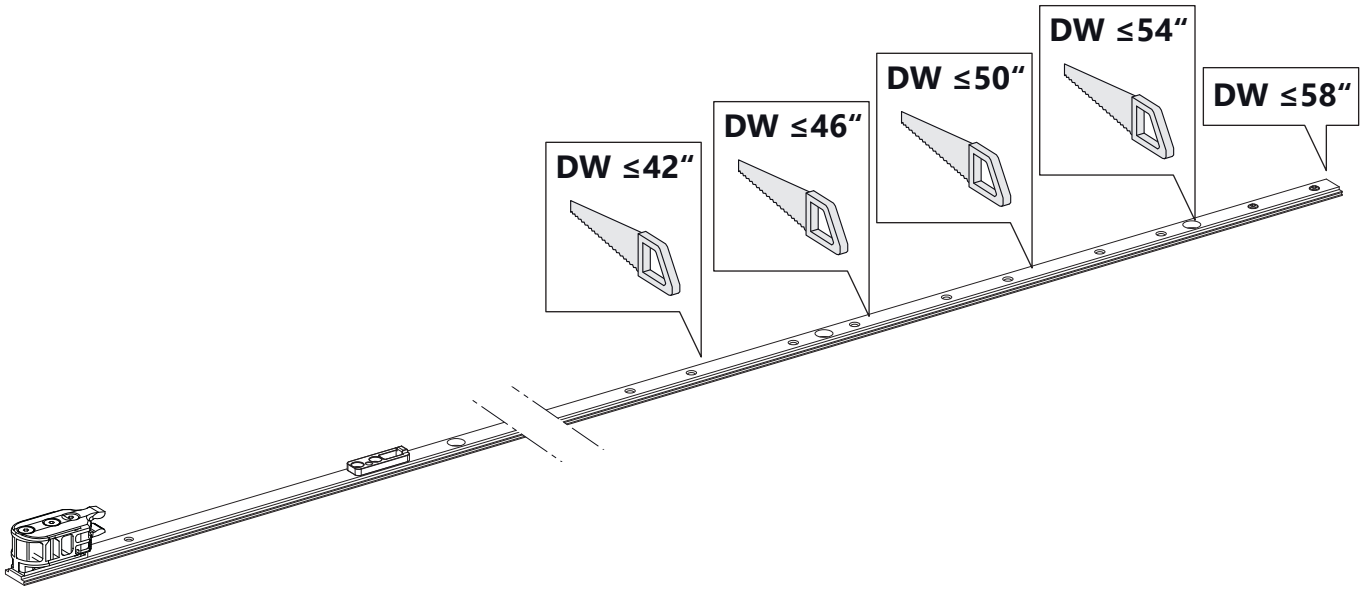

When using a softclose, synchro or push to open, consult the separatly enclosed installation instructions.

Si utiliza un cierre progresivo, sincronizado o de pulsar para abrir, consulte las instrucciones de instalación que se adjuntan por separado.

INSTALLATION INSTRUCTION

SLIDING DOOR HARDWARE *HERRAJES PARA PUERTAS CORREDERAS*

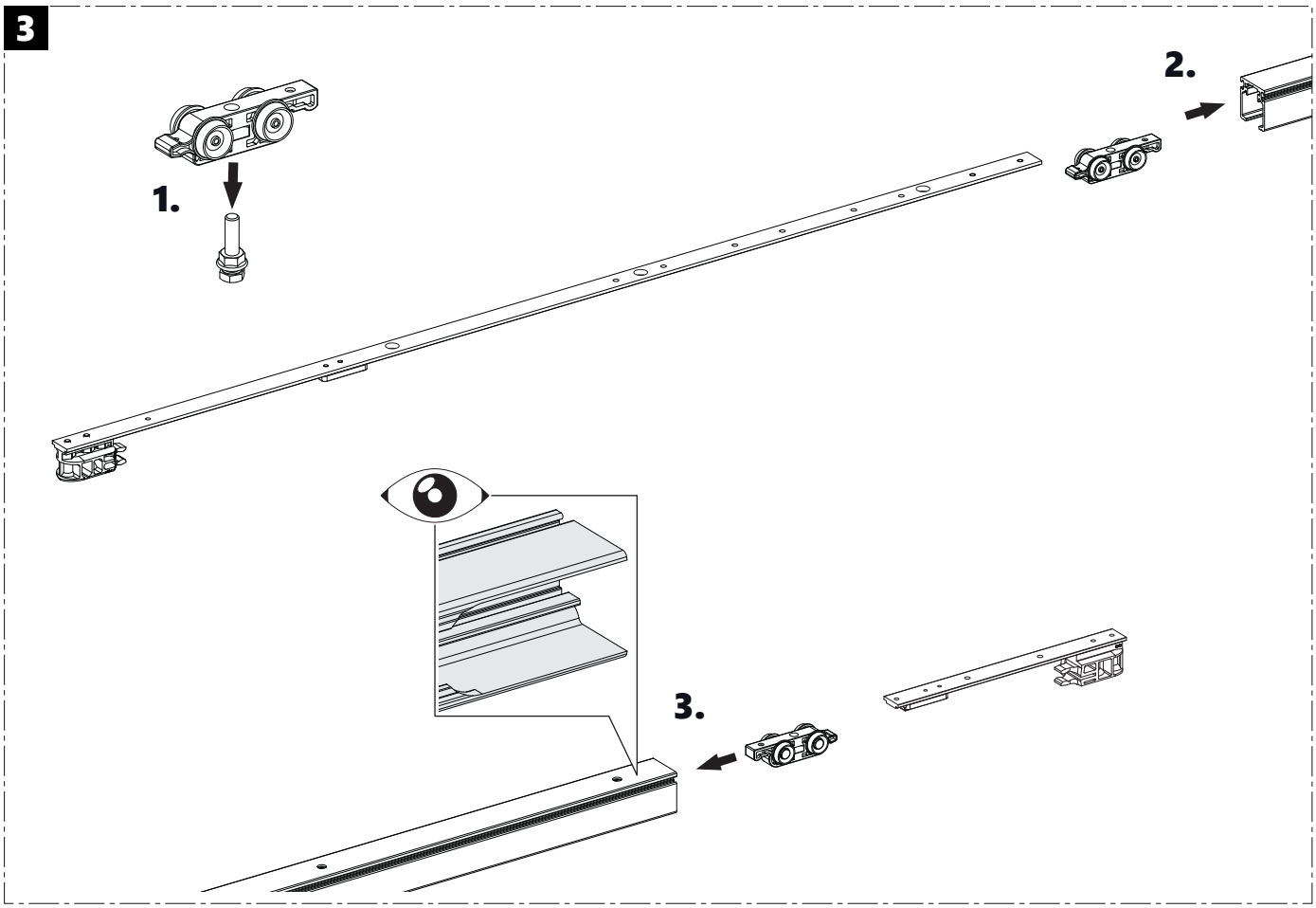

02/07/2024 - Details and specifications are subject to change without notice.
No responsibility will be accepted for any errors or omissions. Millimeters supersede inches.

INSTALLATION INSTRUCTION

SLIDING DOOR HARDWARE *HERRAJES PARA PUERTAS CORREDERAS*

4

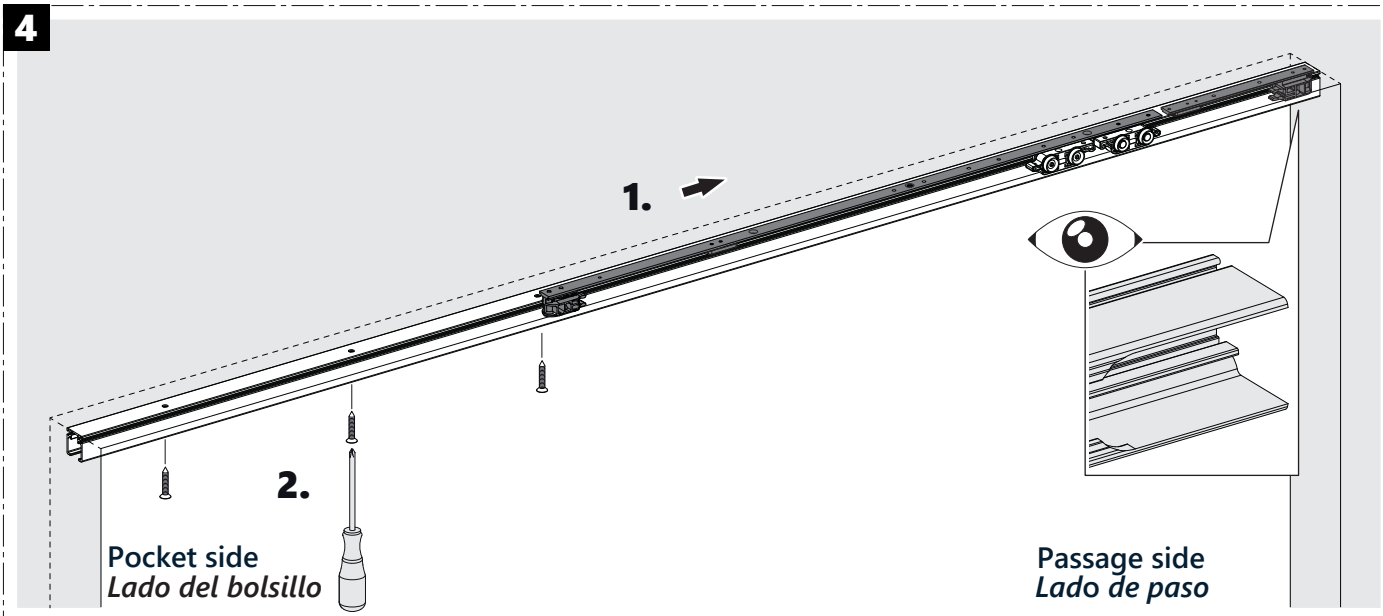

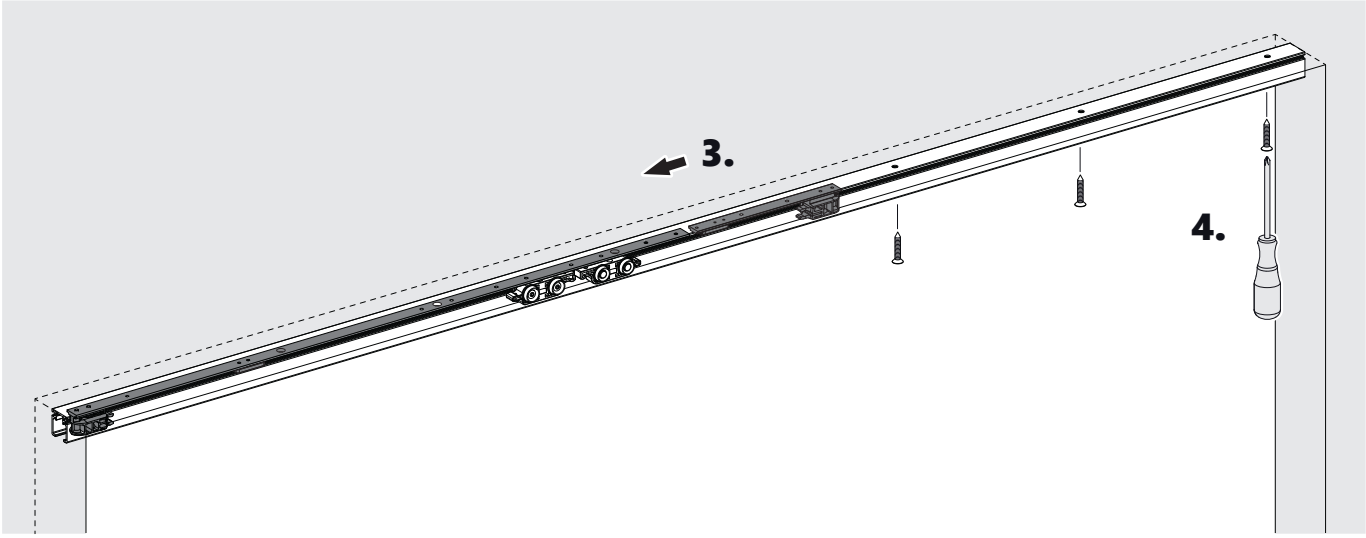

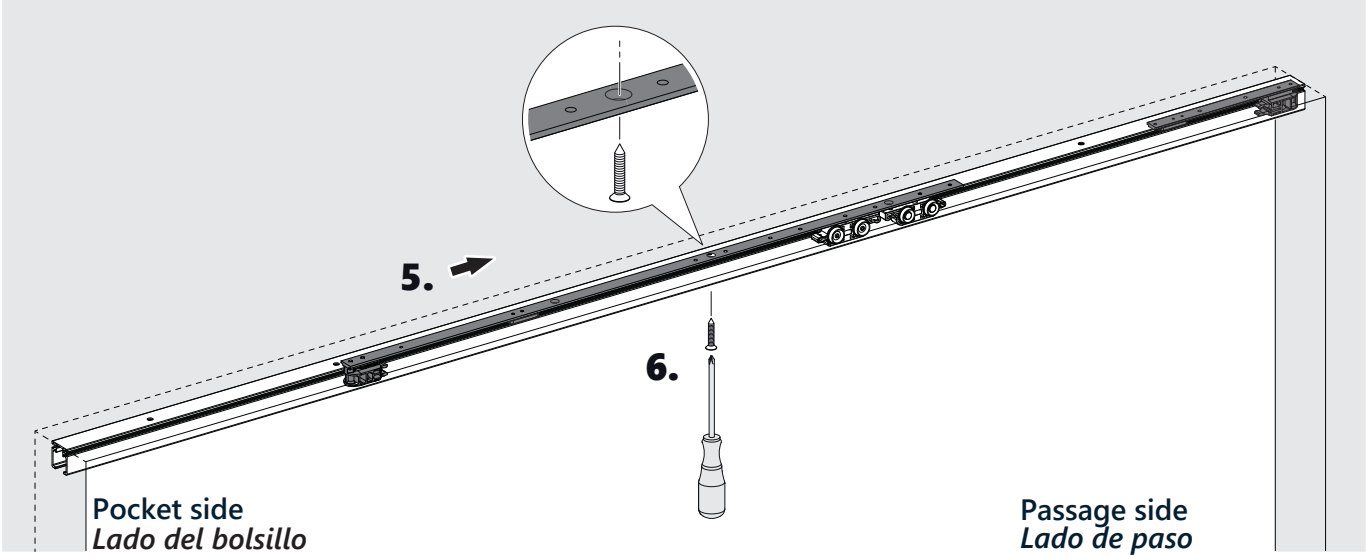

INSTALLATION INSTRUCTION

SLIDING DOOR HARDWARE *HERRAJES PARA PUERTAS CORREDERAS*

5

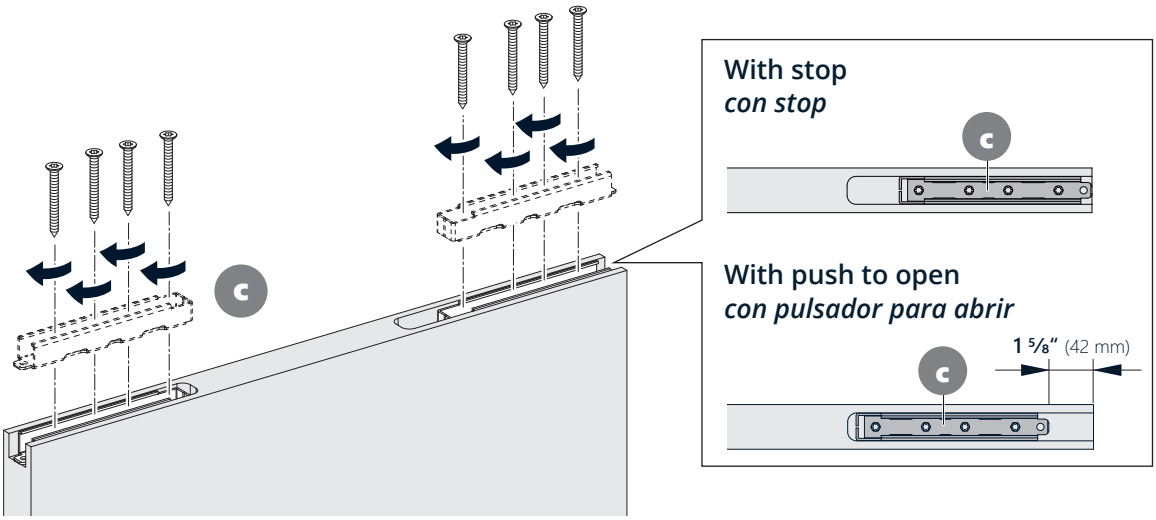

6

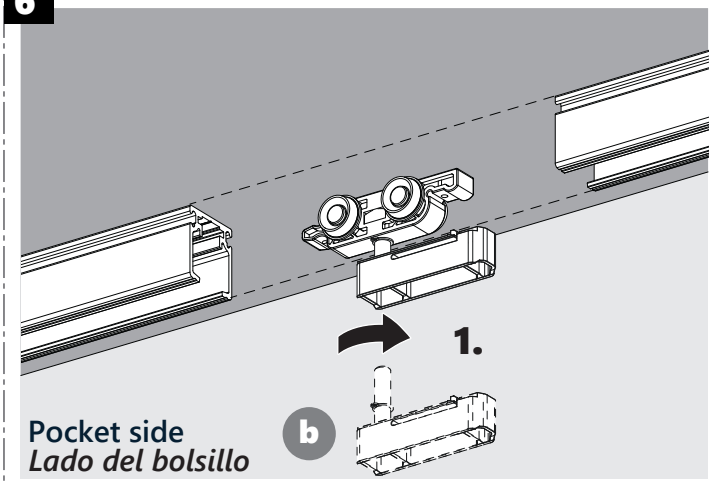

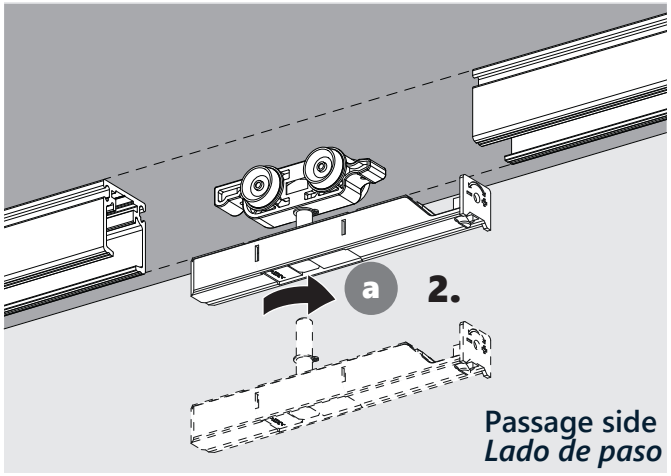

02/07/2024 - Details and specifications are subject to change without notice.
No responsibility will be accepted for any errors or omissions. Millimeters supersede inches.

INSTALLATION INSTRUCTION

SLIDING DOOR HARDWARE *HERRAJES PARA PUERTAS CORREDERAS*

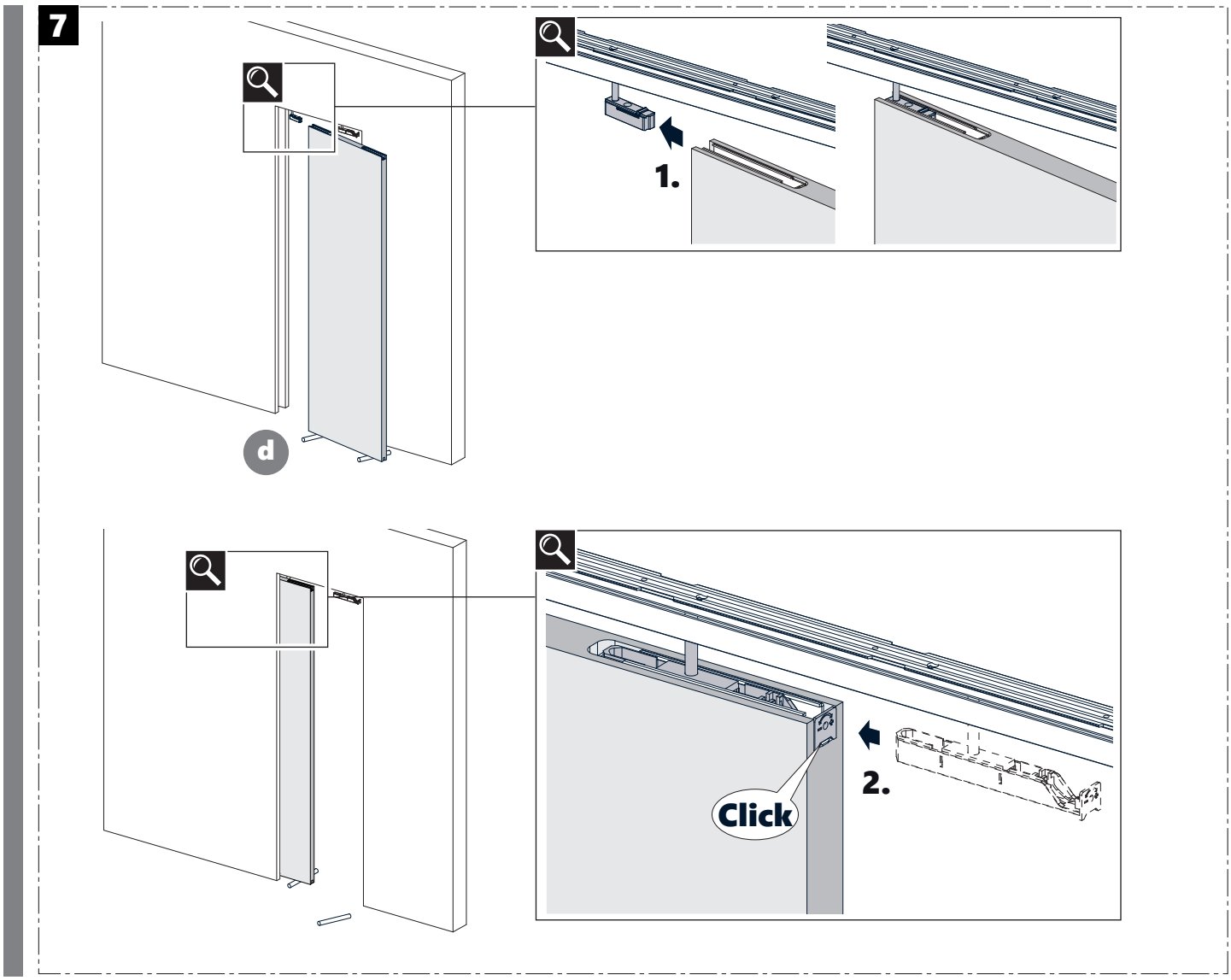

INSTALLATION INSTRUCTION

SLIDING DOOR HARDWARE *HERRAJES PARA PUERTAS CORREDERAS*

8

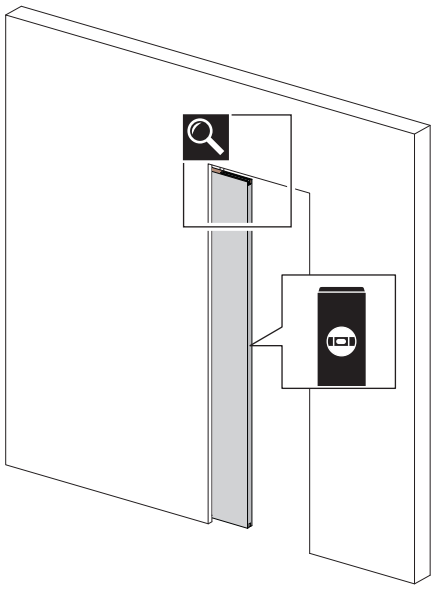

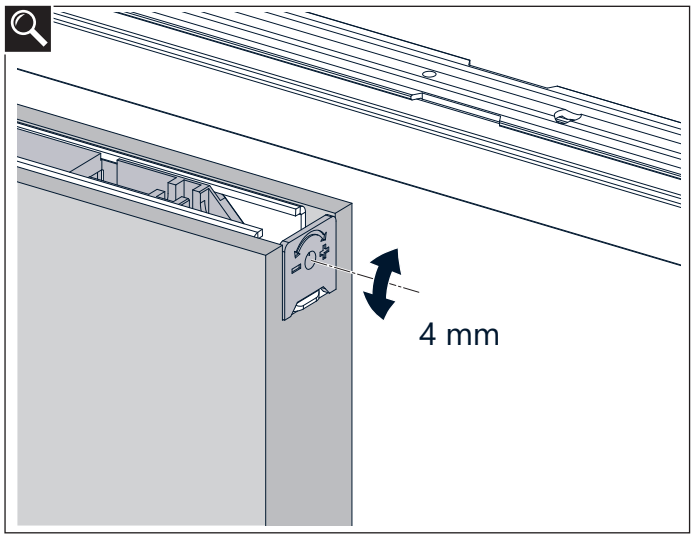

9

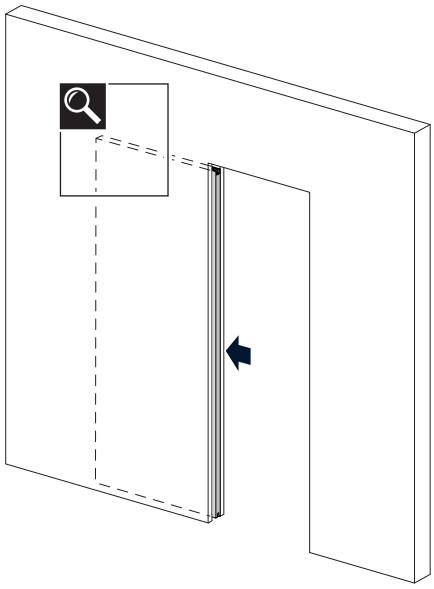

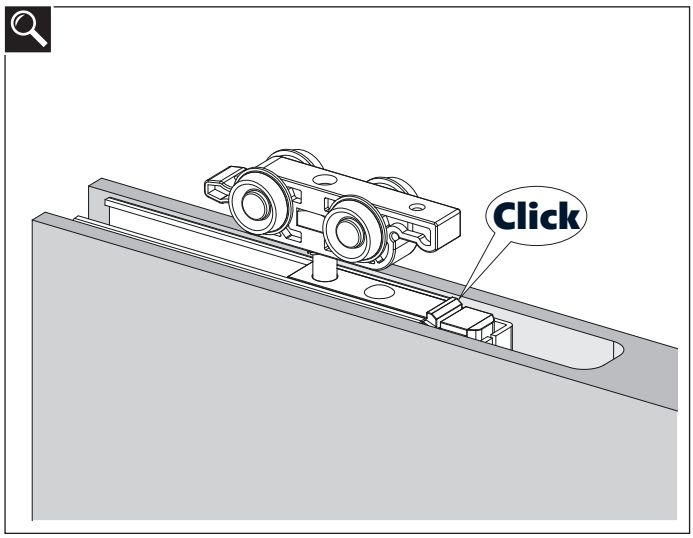

02/07/2024 - Details and specifications are subject to change without notice.
No responsibility will be accepted for any errors or omissions. Millimeters supersede inches.

INSTALLATION INSTRUCTION

SLIDING DOOR HARDWARE *HERRAJES PARA PUERTAS CORREDERAS*

10

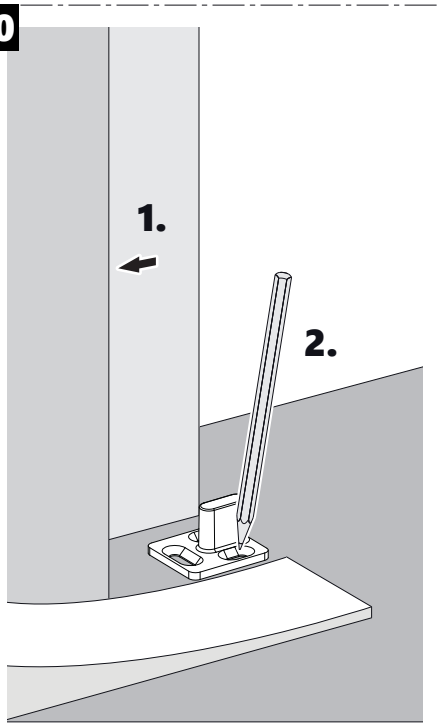

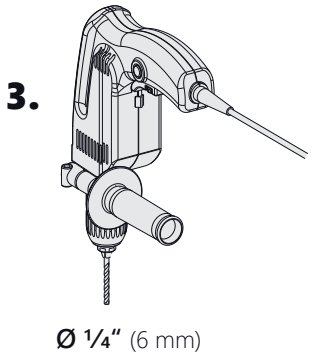

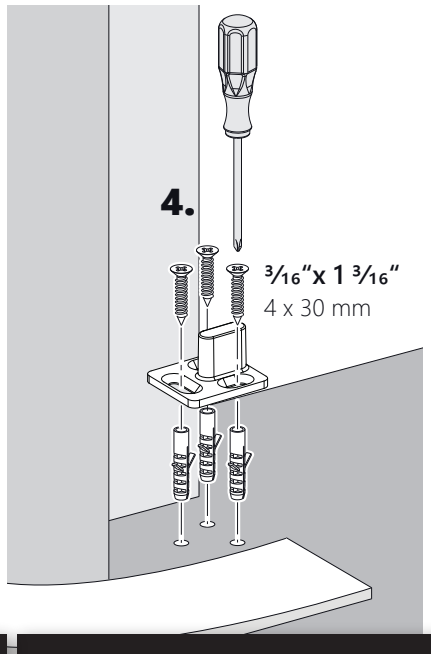

The fastening material must be provided by the customer and must be adapted to the local conditions!

El material de fijación debe ser suministrado por el cliente y debe adaptarse a las condiciones locales.

11

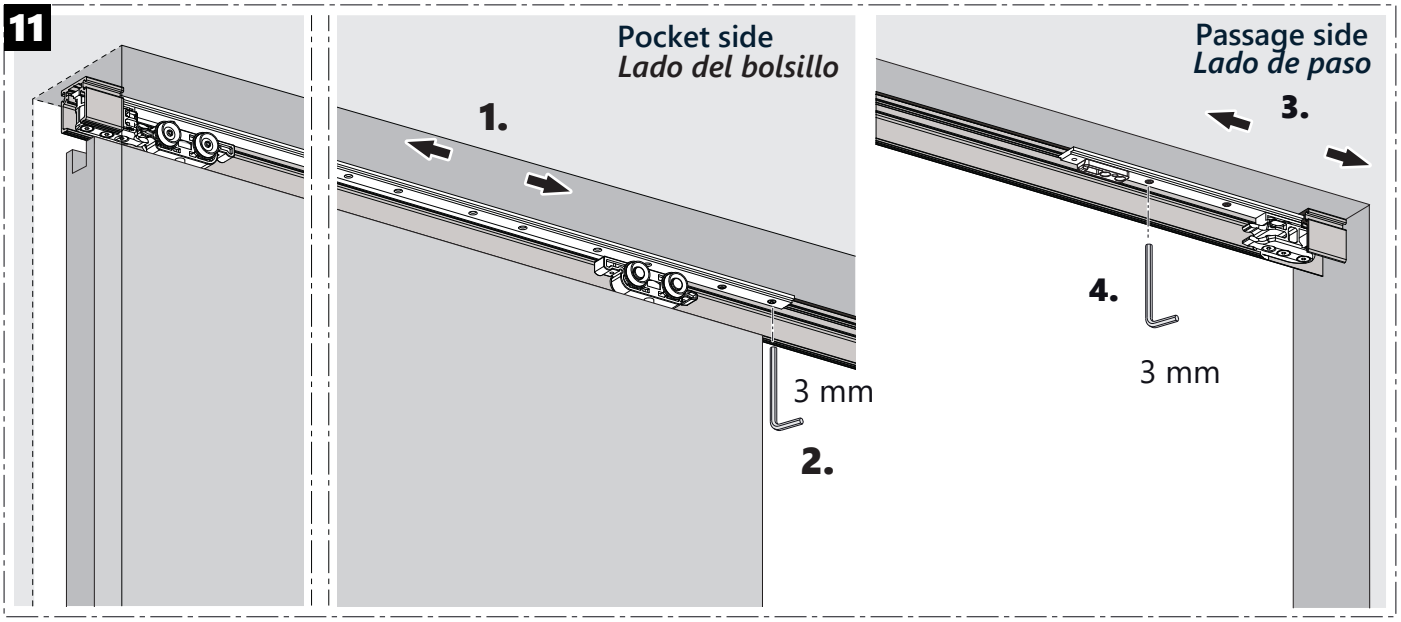

INSTALLATION INSTRUCTION

SLIDING DOOR HARDWARE *HERRAJES PARA PUERTAS CORREDERAS*
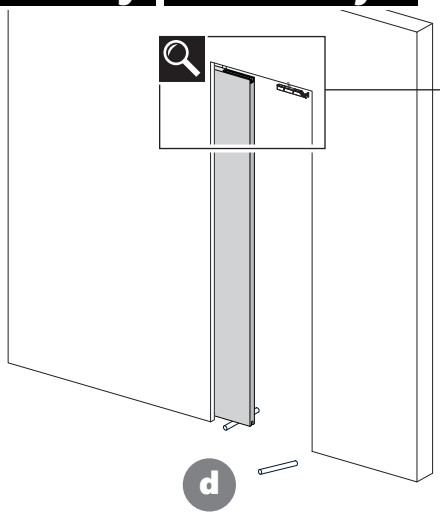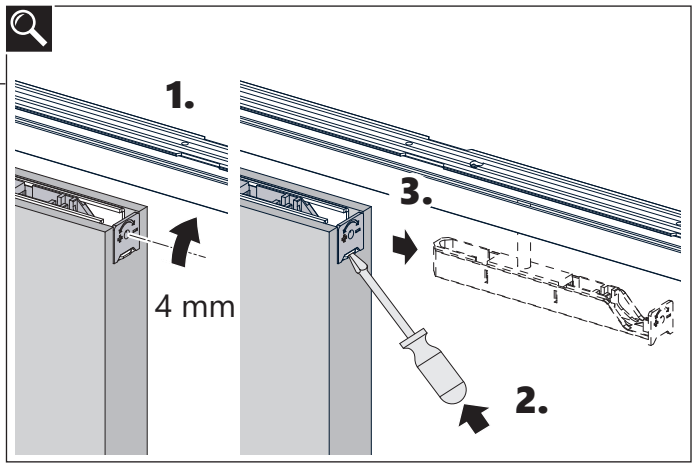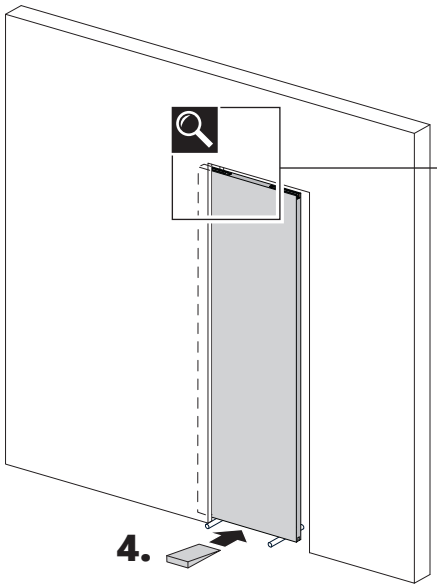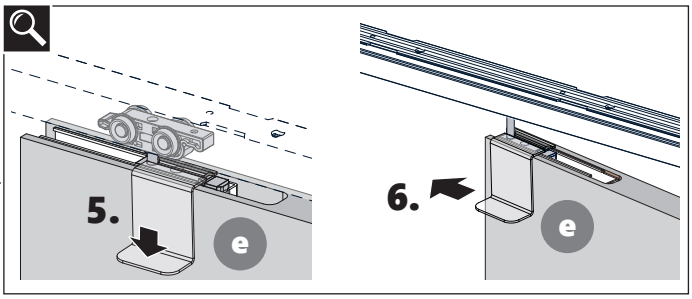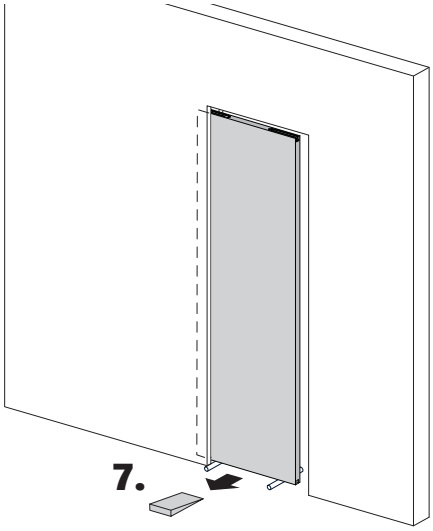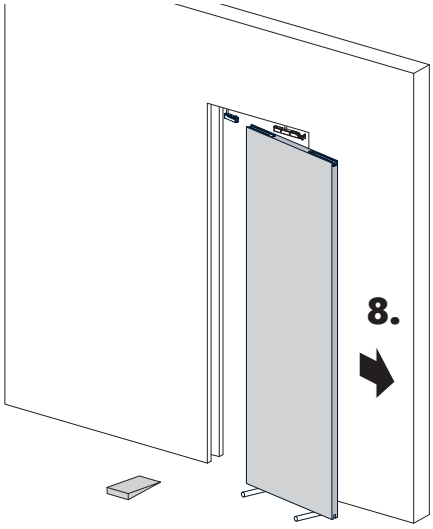
Disassembly ***Desmontaje***